STEVES AND SONS
203 Humble Ave.
San Antonio, TX 78225

OPAQUE OR DIRECT GLAZED FIBERGLASS DOOR SINGLE w/ or w/out SIDELITE(S)

INSWING/OUTSWING "NON-IMPACT"

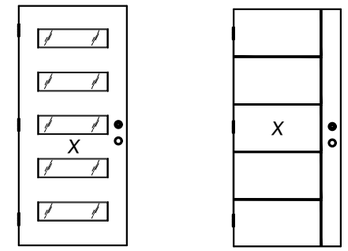

MODERN 5 LITE V-GROOVE

REGENCY MODERN COLLECTION

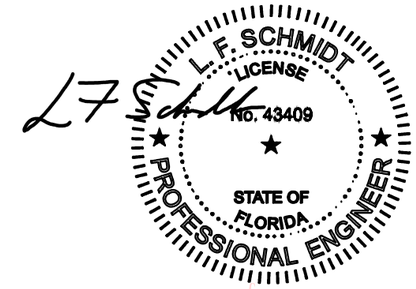

Digitally signed by Lyndon F Schmidt
Date: 2026.07.07 15:41:45 -04'00'

This item has been digitally signed and sealed by **L. F. Schmidt, P.E.** on the date adjacent to the seal.

Printed copies of this document are not considered signed and sealed and the signature must be verified on any electronic copies.

THIS PRODUCT APPROVAL IS VALID ONLY FOR THE STATE OF FLORIDA

GENERAL NOTES

1. This product has been evaluated and is in compliance with the 9th Edition (2026) Florida Building Code (FBC) structural requirements excluding the "High Velocity Hurricane Zone" (HVHZ).
2. Product anchors shall be as listed and spaced as shown on details. Anchor embedment to base material shall be beyond wall dressing or stucco.
3. When used in areas requiring wind borne debris protection this product is required to be protected with an impact resistant covering that complies with FBC Sections 1609.1.2 & R301.2.1.2 of the FBC.
4. For 2x stud framing construction, anchoring of these units shall be the same as that shown for 2x buck masonry construction.
5. Site conditions that deviate from the details of this drawing require further engineering analysis by a licensed engineer or registered architect.

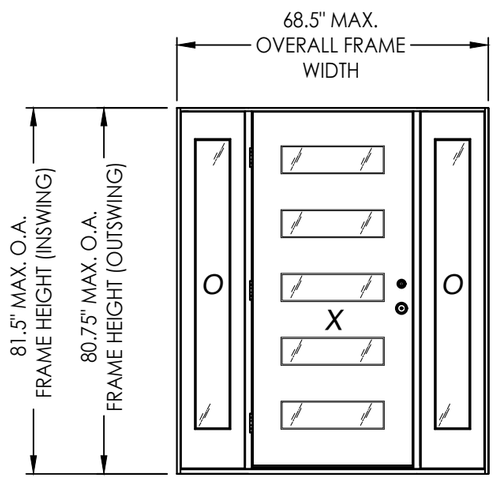

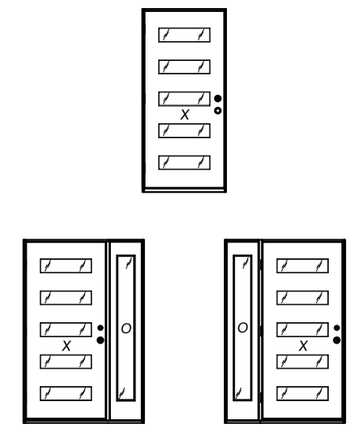

CONTINUOUS HEAD & SILL

CONFIGURATION	MAX. FRAME DIMENSION	DESIGN PRESSURE (PSF) INSWING		DESIGN PRESSURE (PSF) OUTSWING	
		POSITIVE	NEGATIVE	POSITIVE	NEGATIVE
X	37.5" x 81.5"	+65.0	-65.0	+65.0	-65.0
XO, OX, OXO	68.5" x 81.5"	+45.0	-45.0	+45.0	-45.0

TABLE OF CONTENTS

SHEET #	DESCRIPTION	SHEET #	
1	Typical Elevations, Design Pressures & General Notes	8	Horizontal & Vertical Cross Sections (1X Buck)
2	Door Panel Details	9	Horizontal & Vertical Cross Sections (Direct to Masonry)
3	Sidelite Panel Details	10	Vertical Cross Sections
4	Door Panel Options	11	Buck Anchoring
5	Elevations	12	Frame Anchoring & Hardware Details
6	Horizontal Cross Sections	13	Bill of Materials & Components
7	Horizontal & Vertical Cross Sections (2X Buck)		

Documents Prepared By:
Lyndon F. Schmidt
P.E. No. 43409
RW BUILDING CONSULTANTS, INC.
P.O. Box 230, Valrico, FL 33595
Phone No.: 813.659.9197
FBPE Registry No. 9813

PRODUCT: STEVES & SONS FIBERGLASS DOOR

PART OR ASSEMBLY: TYPICAL ELEVATION, DESIGN PRESSURES & GENERAL NOTES

REVISIONS

NO.	DATE	BY
2	7/02/26	UPDATE TO 9TH ED. (2026) FBC	LFS
1	8/02/23	UPDATE TO 8TH ED. (2023) FBC	LFS

DATE: 3/10/22
SCALE: N.T.S.
DWG. BY: RW
CHK. BY: LFS
DRAWING NO.: FL-41467.10
SHEET 1 OF 13

© 2022 R.W. Building Consultants Inc.

Z:\2023 FBC Drawings\Steves & Sons\FL-41467 R4\FL-41467.10.dwg

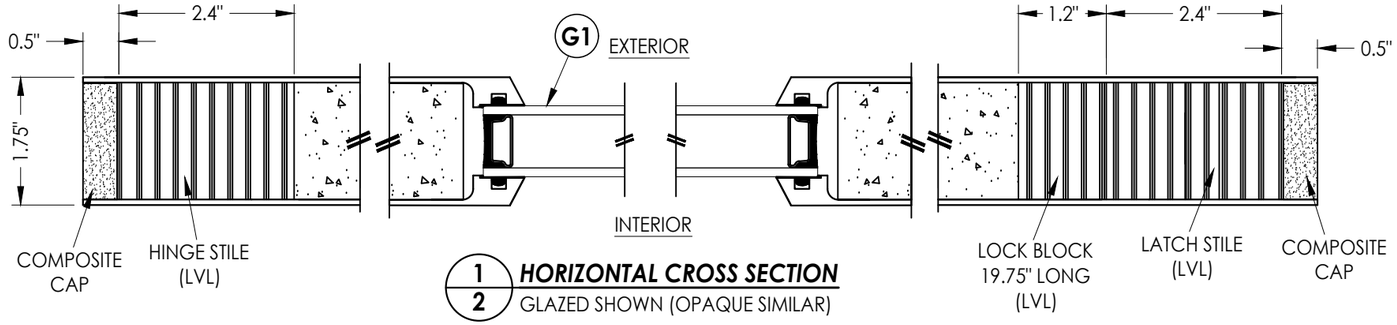

1/2 **HORIZONTAL CROSS SECTION**
GLAZED SHOWN (OPAQUE SIMILAR)

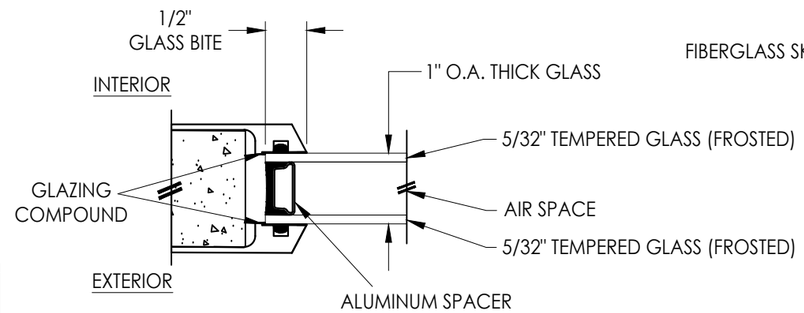

G1 **GLAZING DETAIL**

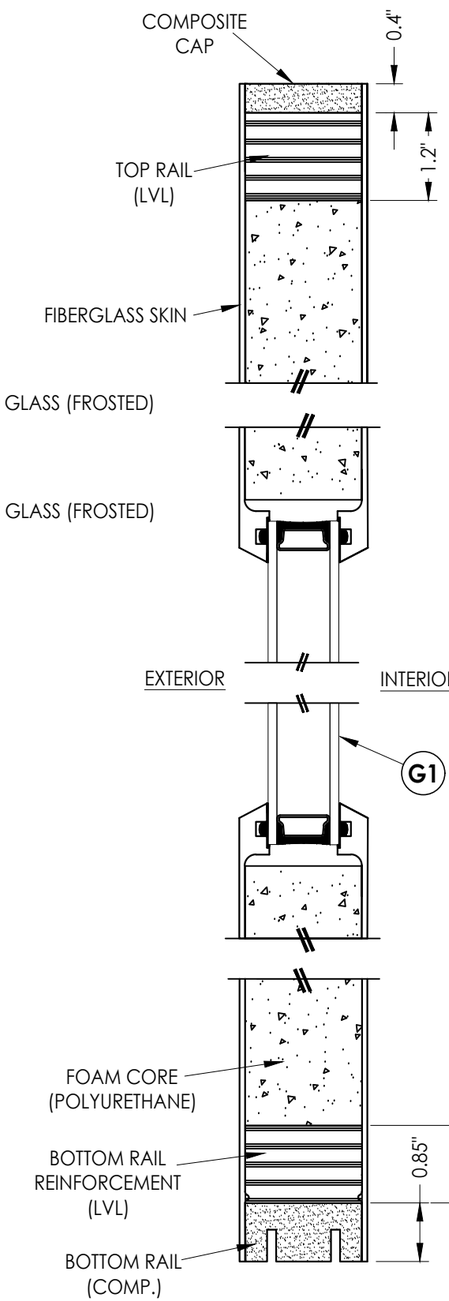

2/2 **VERTICAL CROSS SECTION**
GLAZED SHOWN (OPAQUE SIMILAR)

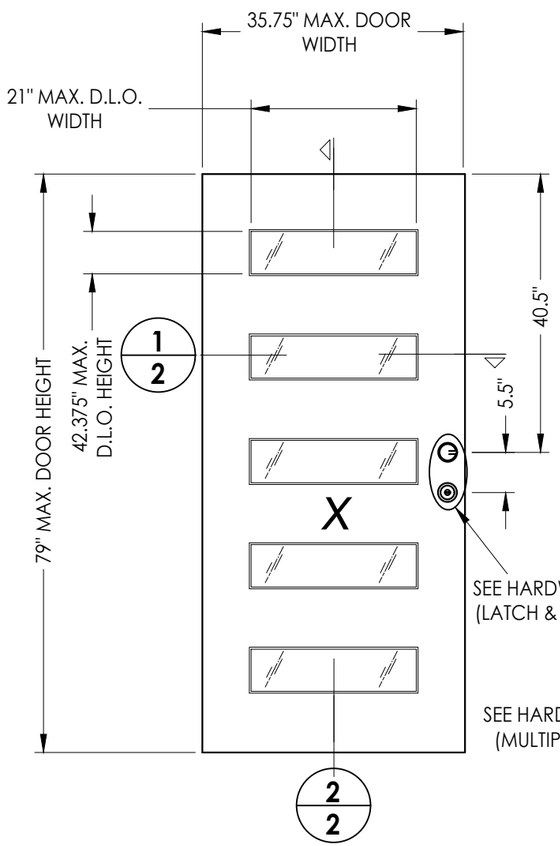

40 **FIBERGLASS DOOR PANEL**
MODERN 5 LITE

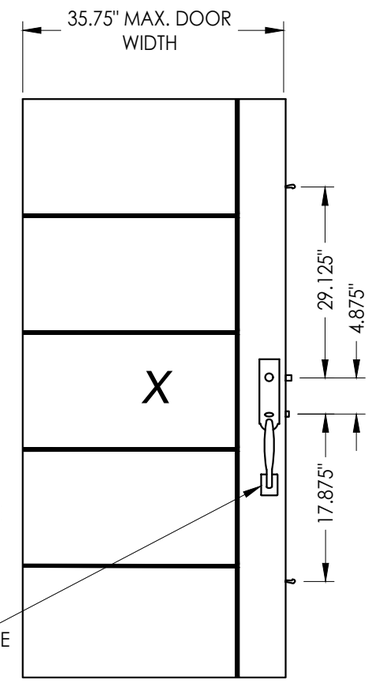

40 **FIBERGLASS DOOR PANEL**
V-GROOVE

HARDWARE TABLE		
MANUFACTURER	MODEL	
KWIKSET	LATCH:	SIGNATURE SERIES
	DEADBOLT:	SIGNATURE SERIES (980)
SCHLAGE	LATCH:	F51
	DEADBOLT:	B60N
ROCKWELL	LATCH:	PREMIUM HANDLESET
	DEADBOLT:	PREMIUM DEADBOLT
ROCKWELL	PREMIUM MULTIPOINT HANDLESET w/ DEADLOCKING TONGUE MULTIPOINT LOCK	

FIBERGLASS DOOR SKIN: MIN. 0.08" THK.
CORE MATERIAL: POLYURETHANE FOAM

Documents Prepared By:
Lyndon F. Schmidt
P.E. No. 43409
RW BUILDING CONSULTANTS, INC.
P.O. Box 230, Valrico, FL 33595
Phone No.: 813.659.9197
FBPE Registry No. 9813

PRODUCT: STEVES & SONS FIBERGLASS DOOR

PART OR ASSEMBLY: DOOR PANEL DETAILS

NO.	DATE	REVISIONS	BY
2	7/02/26	UPDATE TO 9TH ED. (2026) FBC	LFS
1	8/02/23	UPDATE TO 8TH ED. (2023) FBC	LFS

DATE: 3/10/22
SCALE: N.T.S.
DWG. BY: RW
CHK. BY: LFS
DRAWING NO.: FL-41467.10
SHEET 2 OF 13

© 2022 R.W. Building Consultants Inc.

Z:\2023 FBC Drawings\Steves & Sons\FL-41467 R4\FL-41467.10.dwg

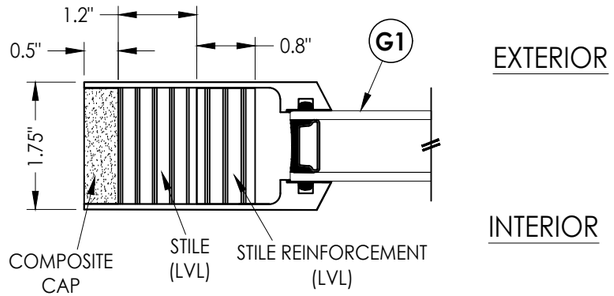

1/3 **HORIZONTAL CROSS SECTION**

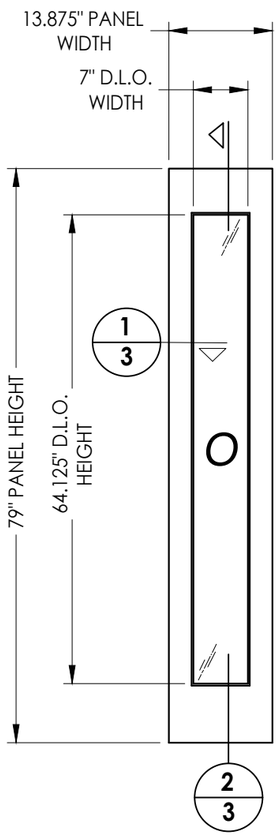

50 **FIBERGLASS SIDELITE PANEL**

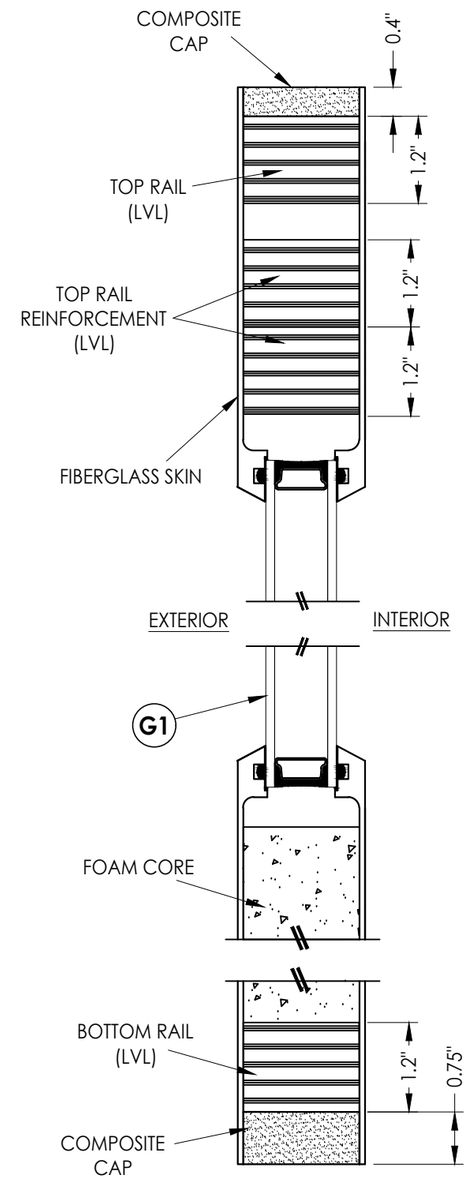

2/3 **VERTICAL CROSS SECTION**

FIBERGLASS SKIN: 0.08" MIN. THK.
FOAM CORE: POLYURETHANE - 1.9 PCF MIN.)

Documents Prepared By:
Lyndon F. Schmidt
P.E. No. 43409
RW BUILDING CONSULTANTS, INC.
P.O. Box 230, Valrico, FL 33595
Phone No.: 813.659.9197
FBPE Registry No. 9813

PRODUCT: STEVES & SONS FIBERGLASS DOOR

PART OR ASSEMBLY: SIDELITE PANEL DETAILS

REVISIONS

NO.	DATE		BY
2	7/02/26	UPDATE TO 9TH ED. (2026) FBC	LFS
1	8/02/23	UPDATE TO 8TH ED. (2023) FBC	LFS

DATE: 3/10/22
SCALE: N.T.S.
DWG. BY: RW
CHK. BY: LFS
DRAWING NO.: FL-41467.10
SHEET 3 OF 13

© 2022 R.W. BUILDING CONSULTANTS INC.

Z:\2023 FBC Drawings\Steves & Sons\FL-41467 R4\FL-41467.10.dwg

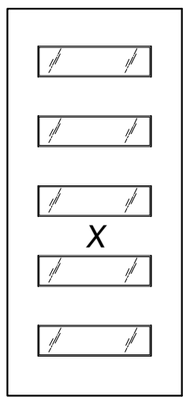

MODERN 5 LITE

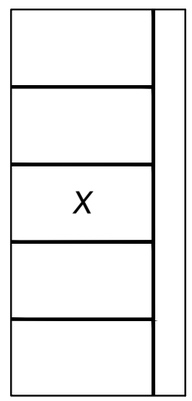

V-GROOVE

REGENCY MODERN COLLECTION

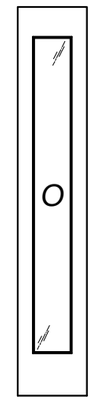

FULL LITE

REGENCY SIDELITES

Documents Prepared By:
Lyndon F. Schmidt
P.E. No. 43409
RW BUILDING CONSULTANTS, INC.
P.O. Box 230, Valrico, FL 33595
Phone No.: 813.659.9197
FBPE Registry No. 9813

PRODUCT: *STEVES & SONS FIBERGLASS DOOR*

PART OR ASSEMBLY: *DOOR PANLE OPTIONS*

NO.	DATE	BY
2	7/02/26	LFS
1	8/02/23	LFS

REVISIONS

UPDATE TO 9TH ED. (2026) FBC
UPDATE TO 8TH ED. (2023) FBC

DATE: 3/10/22
SCALE: N.T.S.
DWG. BY: RW
CHK. BY: LFS
DRAWING NO.: FL-41467.10
SHEET 4 OF 13

© 2022 R.W. BUILDING CONSULTANTS INC.

Z:\2023 FBC Drawings\Steves & Sons\FL-41467 R4\FL-41467.10.dwg

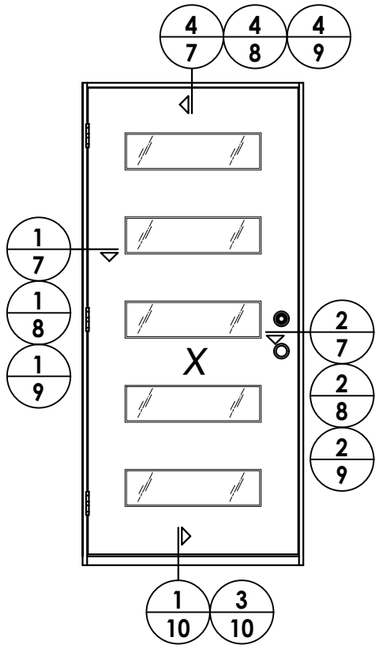

ELEVATION
X

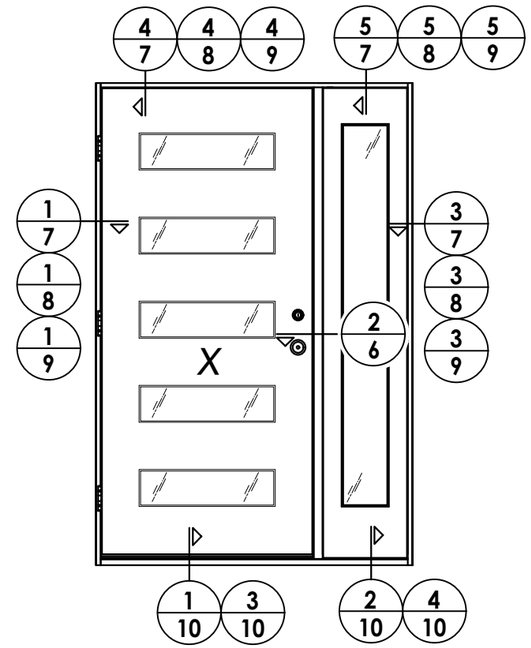

ELEVATION
XO / OX

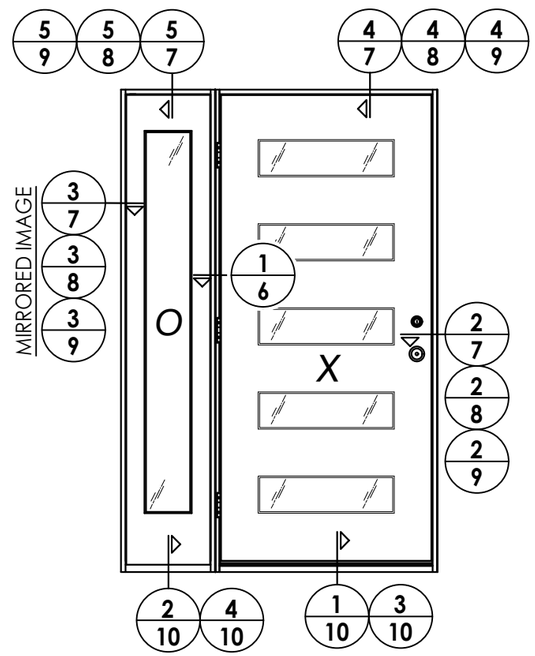

ELEVATION
OX / XO
(CENTER HINGED)

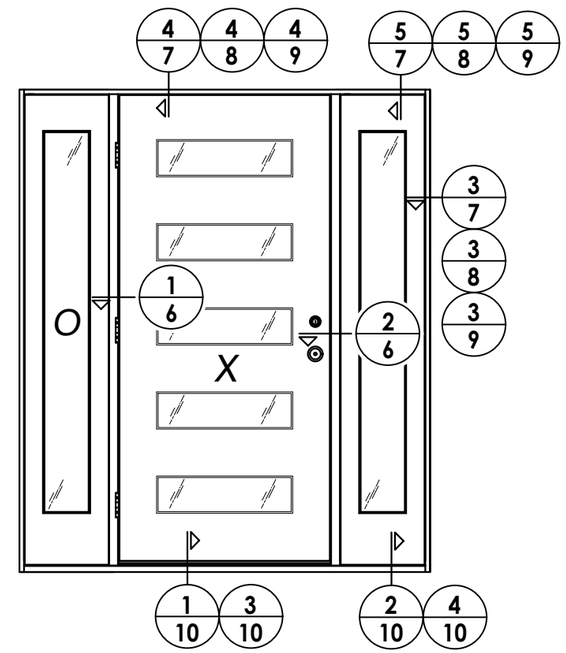

ELEVATION
OXO

Documents Prepared By:
Lyndon F. Schmidt
P.E. No. 43409

RW BUILDING CONSULTANTS, INC.
P.O. Box 230, Valrico, FL 33595
Phone No.: 813.659.9197
FBPE Registry No. 9813

PRODUCT: STEVES & SONS FIBERGLASS DOOR

PART OR ASSEMBLY: ELEVATIONS

REVISIONS

NO.	DATE		BY
2	7/02/26	UPDATE TO 9TH ED. (2026) FBC	LFS
1	8/02/23	UPDATE TO 8TH ED. (2023) FBC	LFS

DATE: 3/10/22
SCALE: N.T.S.
DWG. BY: RW
CHK. BY: LFS
DRAWING NO.: FL-41467.10
SHEET 5 OF 13

© 2022 R.W. Building Consultants Inc.

Z:\2023 FBC Drawings\Steves & Sons\FL-41467 R4\FL-41467.10.dwg

NOTES:

1. Sidelite assembly screws located @ 3" & 19" from each end of mullion (4 total).
2. Moulding secured w/ 16 GA. X 1" brad nails located 1" from ends & 6" o.c. max.

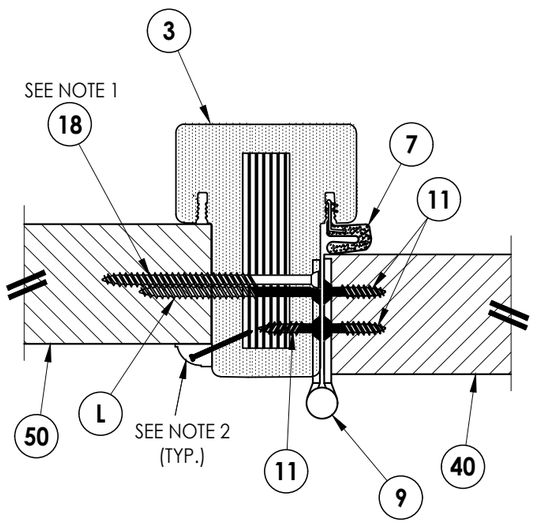

INTERIOR

EXTERIOR

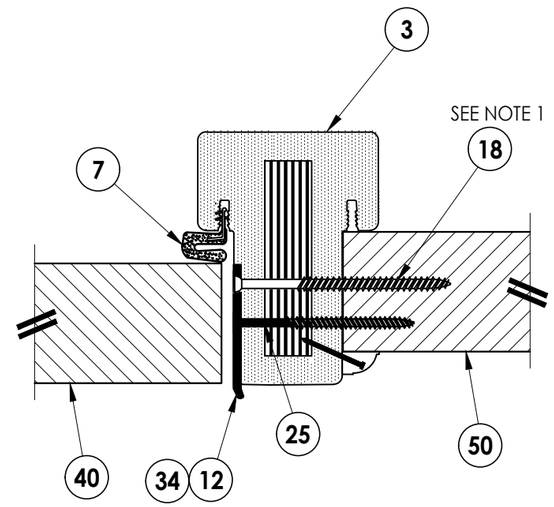

1/6 ***HORIZONTAL CROSS SECTION***
Outswing shown (Inswing similar)

2/6 ***HORIZONTAL CROSS SECTION***
Outswing shown (Inswing similar)

Documents Prepared By:
Lyndon F. Schmidt
P.E. No. 43409

RW BUILDING CONSULTANTS, INC.
P.O. Box 230, Valrico, FL 33595
Phone No.: 813.659.9197
FBPE Registry No. 9813

PRODUCT: *STEVES & SONS FIBERGLASS DOOR*

PART OR ASSEMBLY: *HORIZONTAL CROSS SECTIONS*

REVISIONS

NO.	DATE		BY
2	7/02/26	UPDATE TO 9TH ED. (2026) FBC	LFS
1	8/02/23	UPDATE TO 8TH ED. (2023) FBC	LFS

DATE: 3/10/22
SCALE: N.T.S.
DWG. BY: RW
CHK. BY: LFS
DRAWING NO.: FL-41467.10
SHEET 6 OF 13

© 2022 R.W. BUILDING CONSULTANTS INC.

Z:\2023 FBC Drawings\Steves & Sons\FL-41467 R4\FL-41467.10.dwg

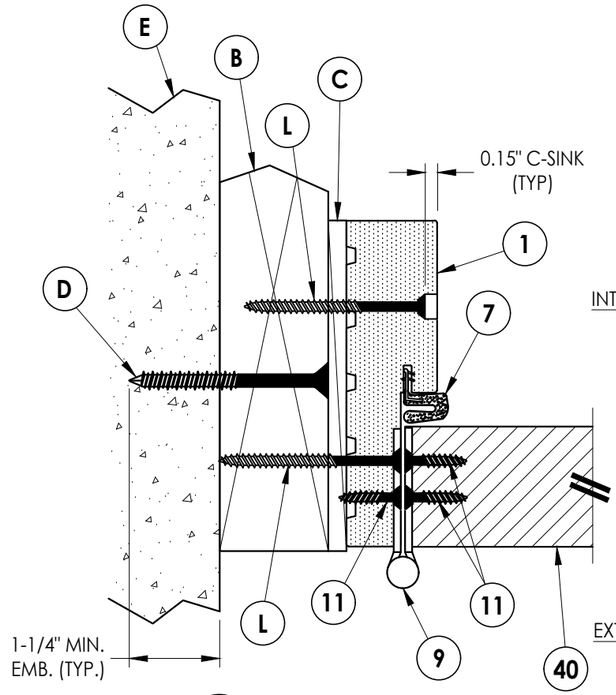

1/7 HORIZONTAL CROSS SECTION
Shown w/ 2X Buck
Outswing shown (Inswing similar)

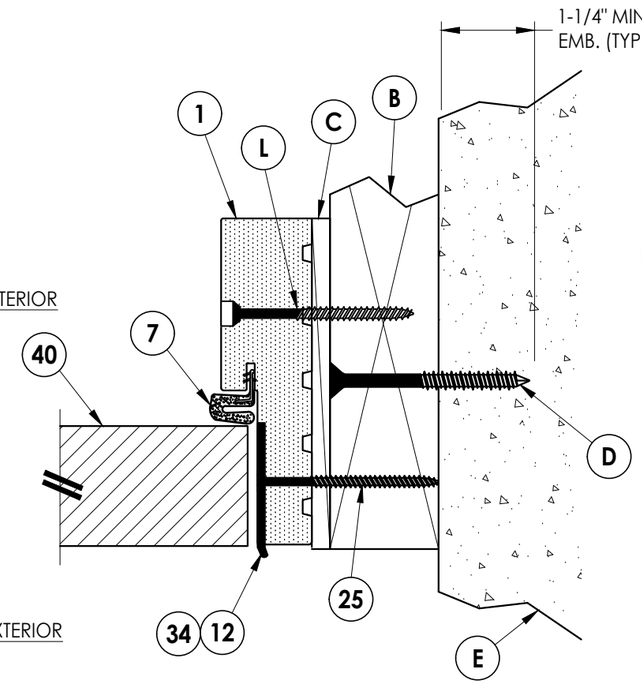

2/7 HORIZONTAL CROSS SECTION
Shown w/ 2X Buck
Outswing shown (Inswing similar)

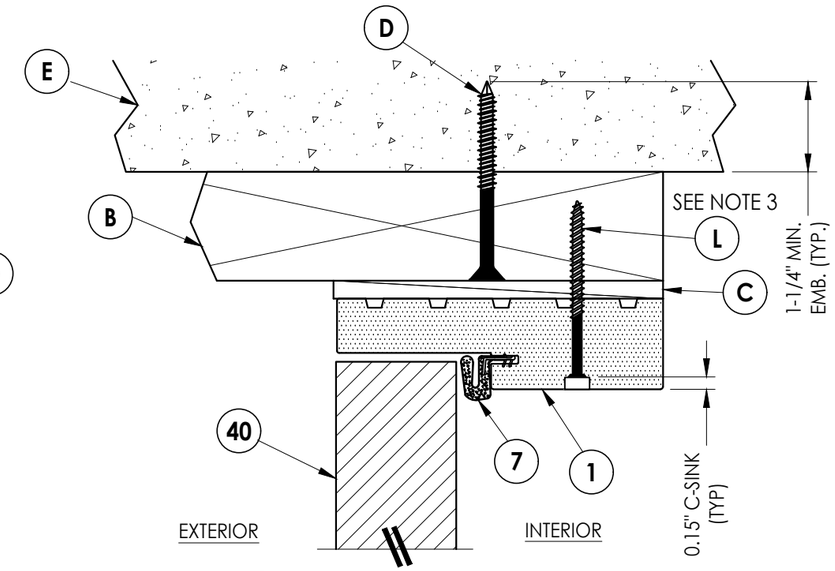

4/7 VERTICAL CROSS SECTION
Shown w/ 2X Buck
Outswing shown (Inswing similar)

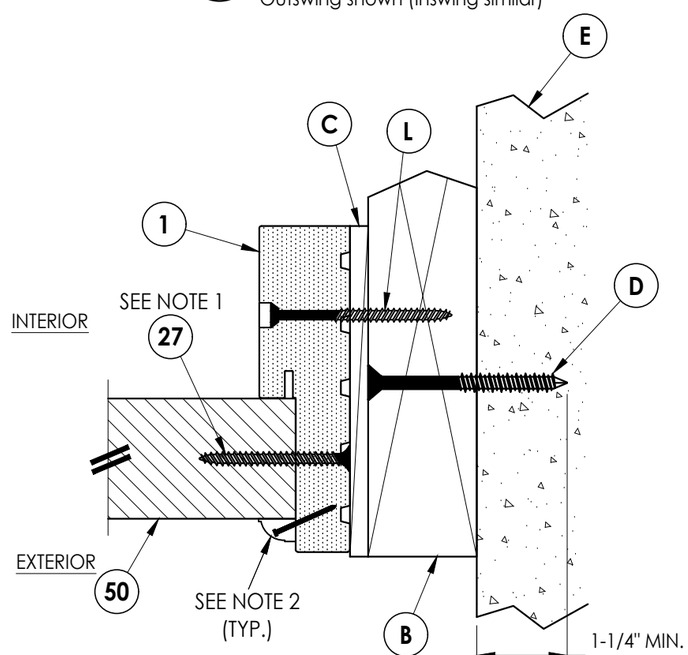

3/7 HORIZONTAL CROSS SECTION
Shown w/ 2X Buck
Outswing shown (Inswing similar)

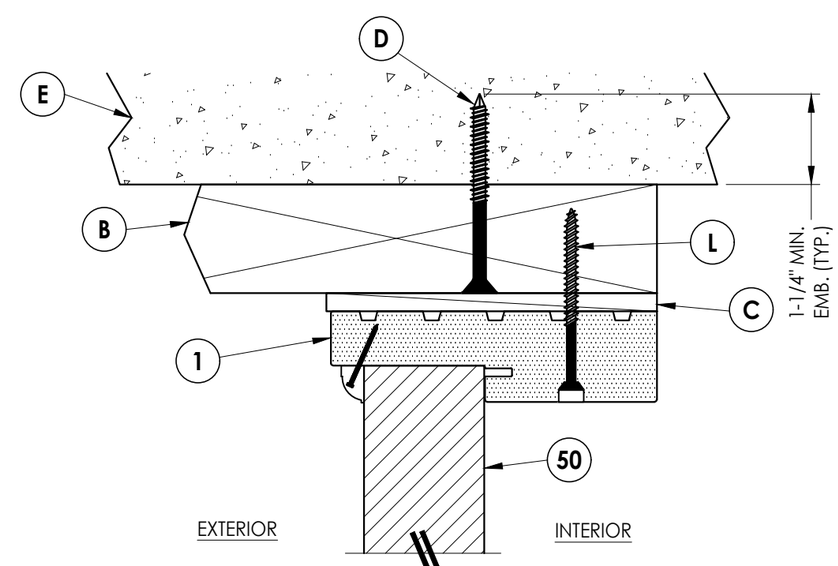

5/7 VERTICAL CROSS SECTION
Shown w/ 2X Buck
Outswing shown (Inswing similar)

NOTES:
1. Sidelite assembly screws located 4" from each end plus 4 more equally spaced along jamb (6 total).
2. Moulding secured w/ 16 GA. X 1" brad nails located 1" from ends & 6" o.c. max.
3. Anchor @ head is not required for single door (X) only.

Documents Prepared By:
Lyndon F. Schmidt
P.E. No. 43409
RW BUILDING CONSULTANTS, INC.
P.O. Box 230, Valrico, FL 33595
Phone No.: 813.659.9197
FBPE Registry No. 9813

PRODUCT: STEVES & SONS FIBERGLASS DOOR

PART OR ASSEMBLY: HORIZONTAL & VERTICAL CROSS SECTIONS (2X BUCK)

REVISIONS

NO.	DATE		BY
2	7/02/26	UPDATE TO 9TH ED. (2026) FBC	LFS
1	8/02/23	UPDATE TO 8TH ED. (2023) FBC	LFS

DATE: 3/10/22
SCALE: N.T.S.
DWG. BY: RW
CHK. BY: LFS
DRAWING NO.: FL-41467.10
SHEET 7 OF 13

© 2022 R.W. Building Consultants Inc.

Z:\2023 FBC Drawings\Steves & Sons\FL-41467 R4\FL-41467.10.dwg

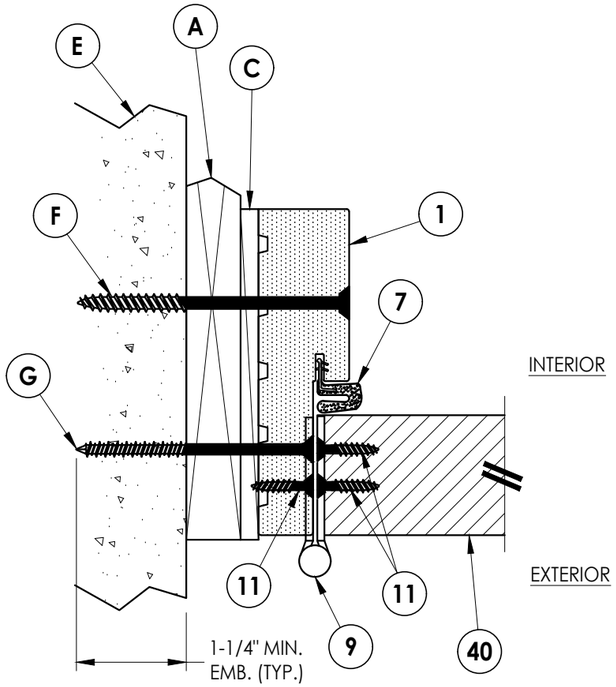

1/8 HORIZONTAL CROSS SECTION
Shown w/ 1X Buck
Outswing shown (Inswing similar)

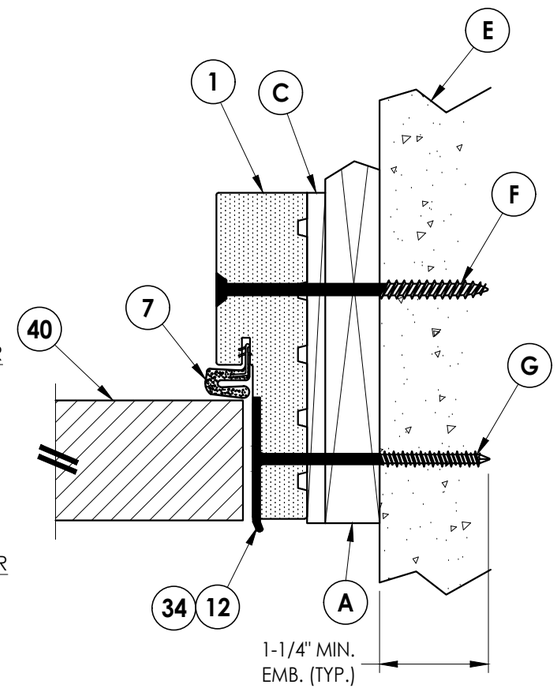

2/8 HORIZONTAL CROSS SECTION
Shown w/ 1X Buck
Outswing shown (Inswing similar)

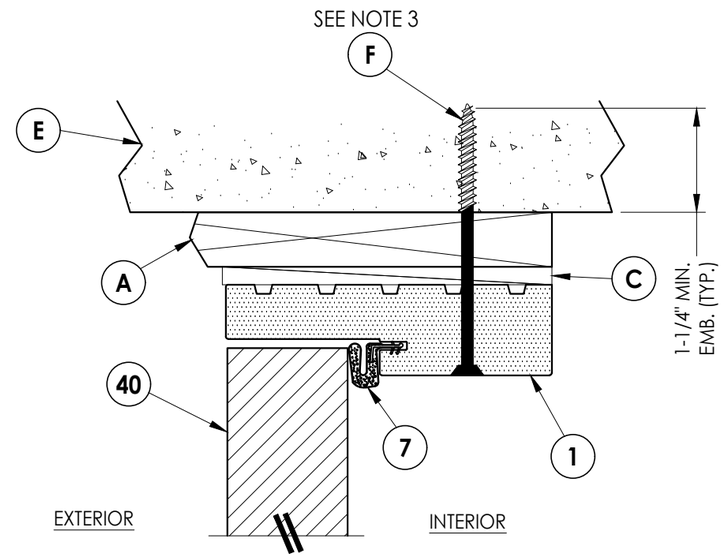

4/8 VERTICAL CROSS SECTION
Shown w/ 1X Buck
Outswing shown (Inswing similar)

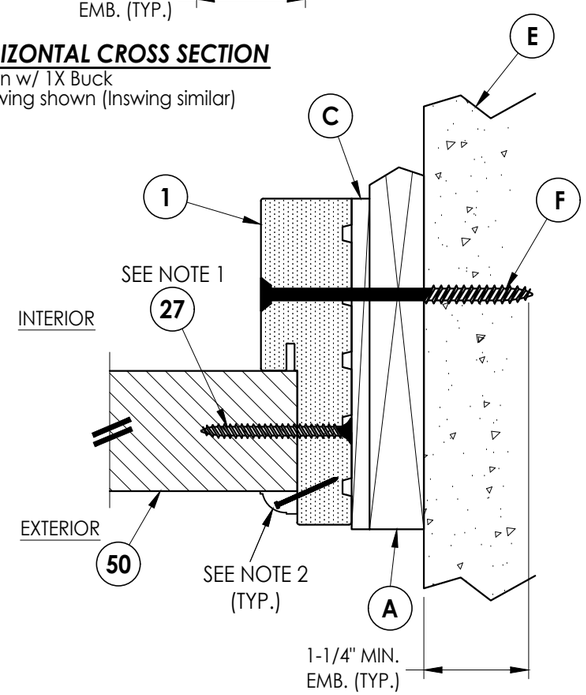

3/8 HORIZONTAL CROSS SECTION
Shown w/ 1X Buck
Outswing shown (Inswing similar)

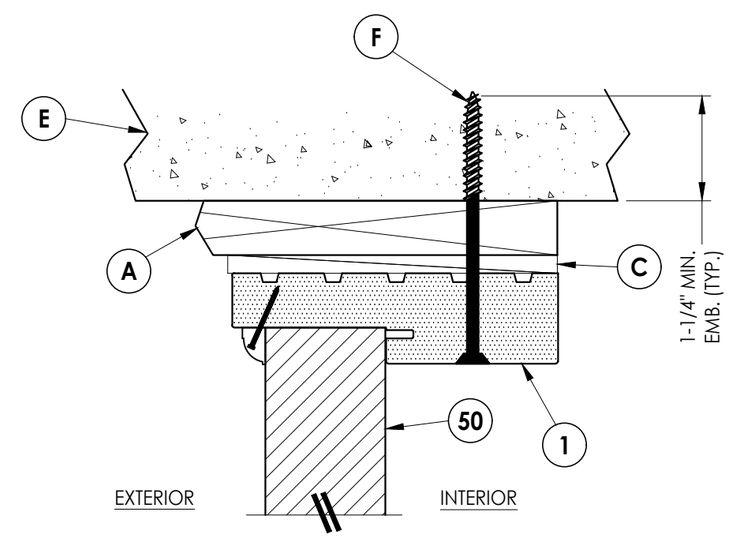

5/8 VERTICAL CROSS SECTION
Shown w/ 1X Buck
Outswing shown (Inswing similar)

NOTES:
1. Sidelite assembly screws located 4" from each end plus 4 more equally spaced along jamb (6 total).
2. Moulding secured w/ 16 GA. X 1" brad nails located 1" from ends & 6" o.c. max.
3. Anchor @ head is not required for single door (X) only.

Documents Prepared By:
Lyndon F. Schmidt
P.E. No. 43409
RW BUILDING CONSULTANTS, INC.
P.O. Box 230, Valrico, FL 33595
Phone No.: 813.659.9197
FBPE Registry No. 9813

PRODUCT: STEVES & SONS FIBERGLASS DOOR

PART OR ASSEMBLY: HORIZONTAL & VERTICAL CROSS SECTIONS (1X BUCK)

REVISIONS

NO.	DATE		BY
2	7/02/26	UPDATE TO 9TH ED. (2026) FBC	LFS
1	8/02/23	UPDATE TO 8TH ED. (2023) FBC	LFS

DATE: 3/10/22
SCALE: N.T.S.
DWG. BY: RW
CHK. BY: LFS
DRAWING NO.: FL-41467.10
SHEET 8 OF 13

© 2022 R.W. BUILDING CONSULTANTS INC.

Z:\2023 FBC Drawings\Steves & Sons\FL-41467 R4\FL-41467.10.dwg

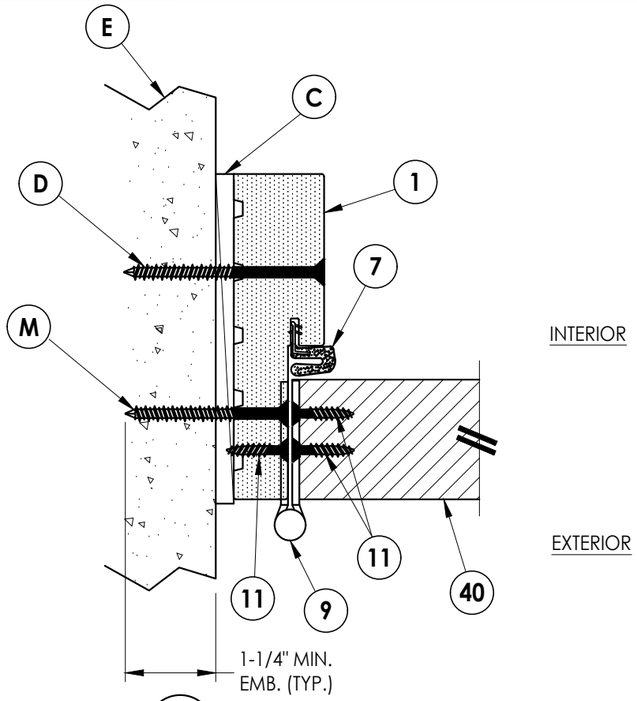

1/9 HORIZONTAL CROSS SECTION
Shown Direct to Masonry
Outswing shown (Inswing similar)

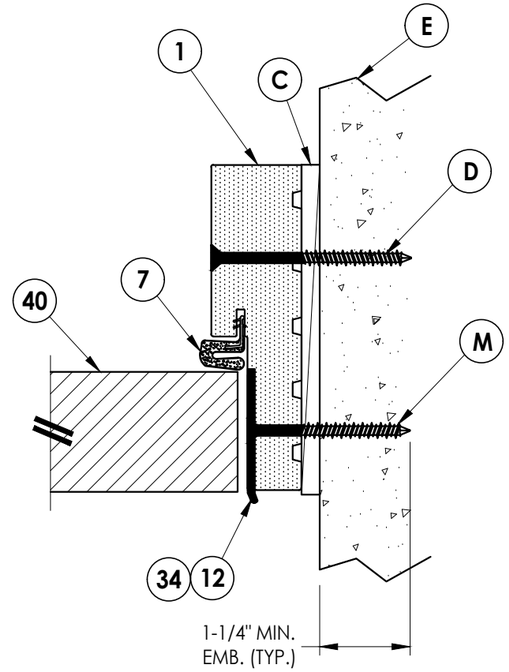

2/9 HORIZONTAL CROSS SECTION
Shown Direct to Masonry
Outswing shown (Inswing similar)

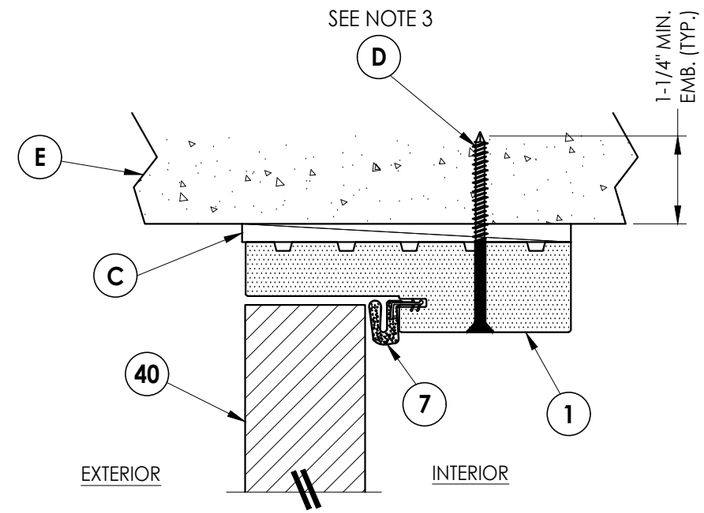

4/9 VERTICAL CROSS SECTION
Shown Direct to Masonry
Outswing shown (Inswing similar)

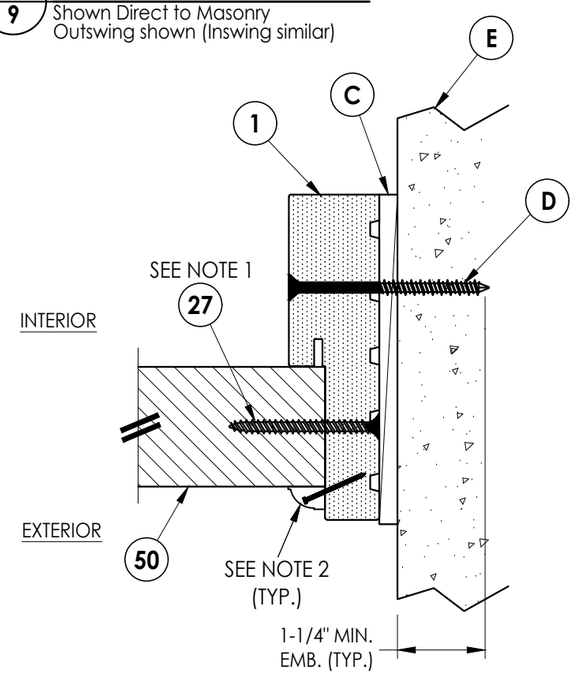

3/9 HORIZONTAL CROSS SECTION
Shown Direct to Masonry
Outswing shown (Inswing similar)

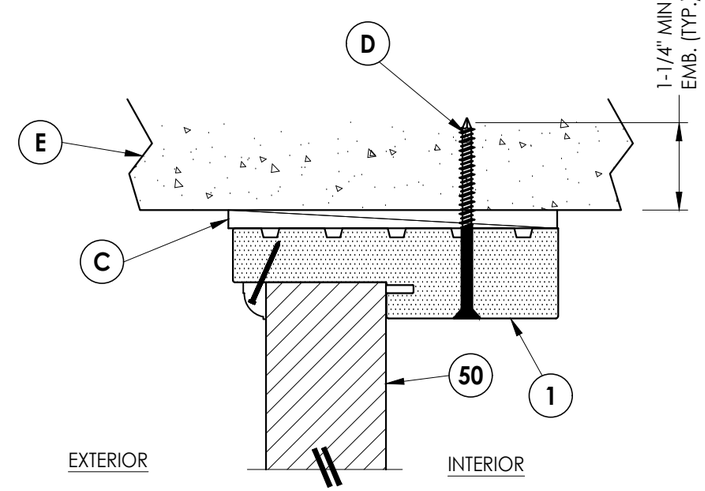

5/9 VERTICAL CROSS SECTION
Shown Direct to Masonry
Outswing shown (Inswing similar)

NOTES:
1. Sidelite assembly screws located 4" from each end plus 4 more equally spaced along jamb (6 total).
2. Moulding secured w/ 16 GA. X 1" brad nails located 1" from ends & 6" o.c. max.
3. Anchor @ head is not required for single door (X) only.

Documents Prepared By:
Lyndon F. Schmidt
P.E. No. 43409
RW BUILDING CONSULTANTS, INC.
P.O. Box 230, Valrico, FL 33595
Phone No.: 813.659.9197
FBPE Registry No. 9813

PRODUCT: STEVES & SONS FIBERGLASS DOOR

PART OR ASSEMBLY: HORIZONTAL & VERTICAL CROSS SECTIONS (DIRECT TO MASONRY)

REVISIONS

NO.	DATE	BY
2	7/02/26	UPDATE TO 9TH ED. (2026) FBC	LFS
1	8/02/23	UPDATE TO 8TH ED. (2023) FBC	LFS

DATE: 3/10/22
SCALE: N.T.S.
DWG. BY: RW
CHK. BY: LFS
DRAWING NO.: FL-41467.10
SHEET 9 OF 13

© 2022 R.W. Building Consultants Inc.

Z:\2023 FBC Drawings\Steves & Sons\FL-41467 R4\FL-41467.10.dwg

Note:
1. Anchor @ sill is not required for single door (X) only.

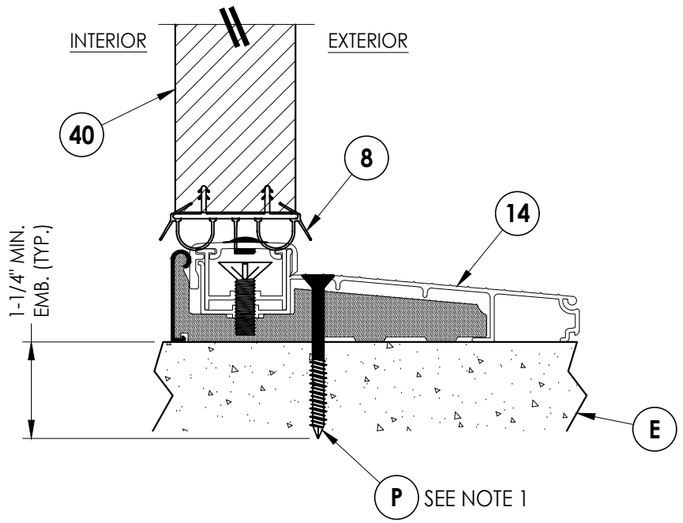

1/10 VERTICAL CROSS SECTION
Inswing Threshold

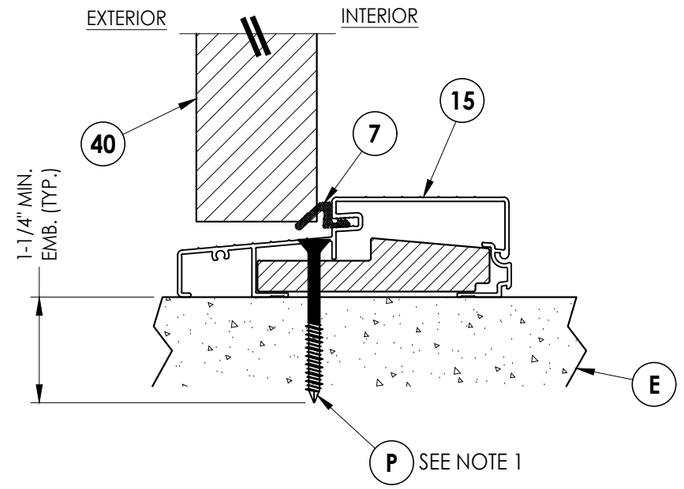

2/10 VERTICAL CROSS SECTION
Outswing Threshold

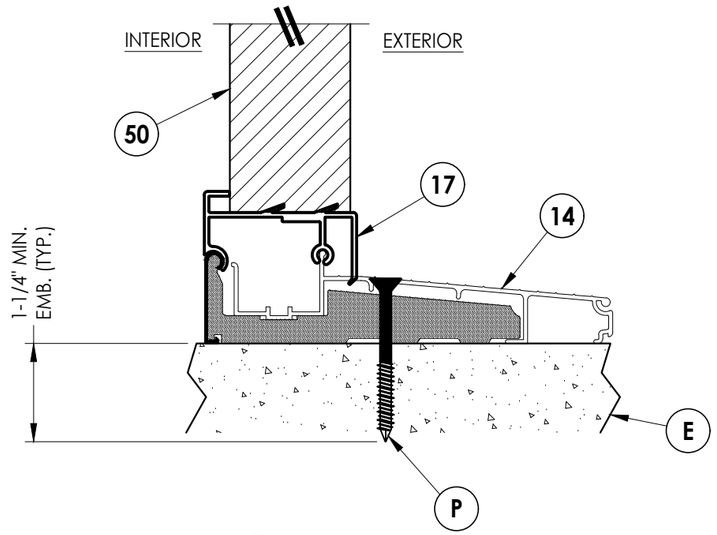

3/10 VERTICAL CROSS SECTION
Inswing Threshold

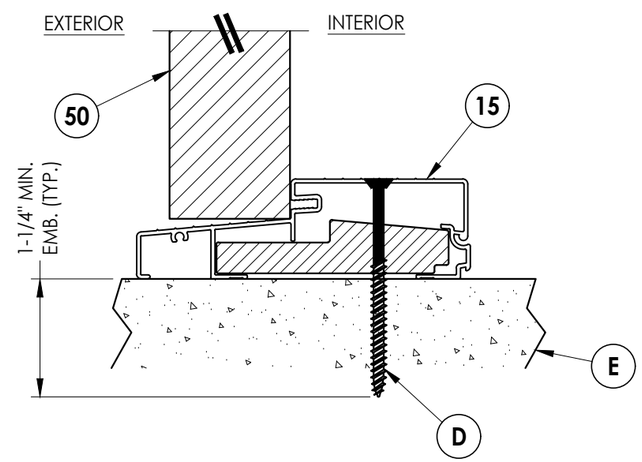

4/10 VERTICAL CROSS SECTION
Outswing Threshold

Documents Prepared By:
Lyndon F. Schmidt
P.E. No. 43409
RW BUILDING CONSULTANTS, INC.
P.O. Box 230, Valrico, FL 33595
Phone No.: 813.659.9197
FBPE Registry No. 9813

PRODUCT: STEVES & SONS FIBERGLASS DOOR

PART OR ASSEMBLY: VERTICAL CROSS SECTIONS

REVISIONS

NO.	DATE		BY
2	7/02/26	UPDATE TO 9TH ED. (2026) FBC	LFS
1	8/02/23	UPDATE TO 8TH ED. (2023) FBC	LFS

DATE: 3/10/22
SCALE: N.T.S.
DWG. BY: RW
CHK. BY: LFS
DRAWING NO.: FL-41467.10
SHEET 10 OF 13

© 2022 R.W. Building Consultants Inc.

Z:\2023 FBC Drawings\Steves & Sons\FL-41467 R4\FL-41467.10.dwg

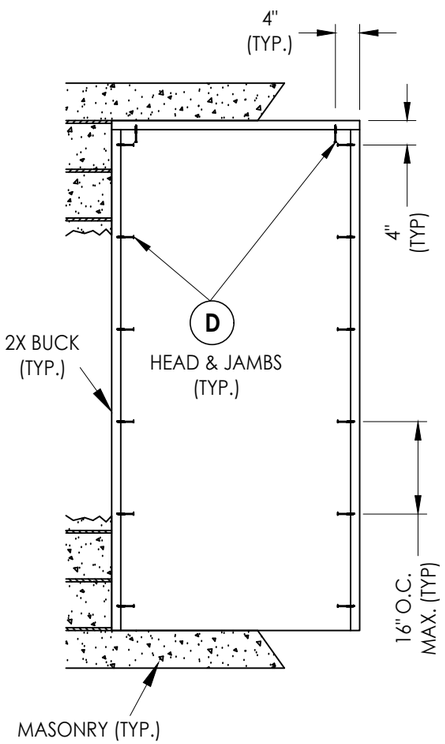

X

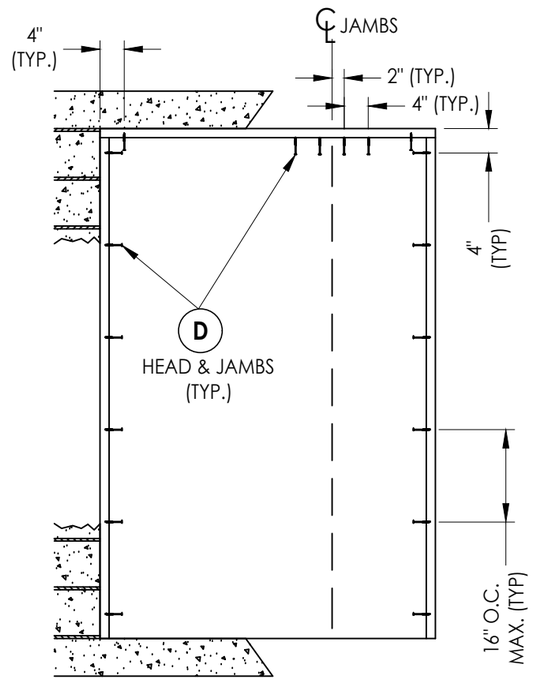

XO, OX

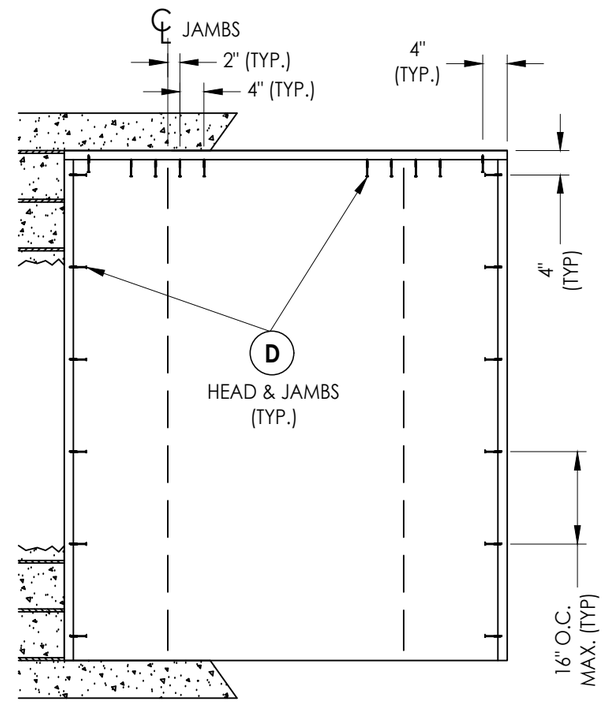

OXO

2X BUCK ANCHORING

Documents Prepared By:
Lyndon F. Schmidt
P.E. No. 43409
RW BUILDING CONSULTANTS, INC.
P.O. Box 230, Valrico, FL 33595
Phone No.: 813.659.9197
FBPE Registry No. 9813

PRODUCT: STEVES & SONS FIBERGLASS DOOR

PART OR ASSEMBLY: BUCK ANCHORING

REVISIONS

NO.	DATE	BY
2	7/02/26 UPDATE TO 9TH ED. (2026) FBC	LFS
1	8/02/23 UPDATE TO 8TH ED. (2023) FBC	LFS

DATE: 3/10/22
SCALE: N.T.S.
DWG. BY: RW
CHK. BY: LFS
DRAWING NO.: FL-41467.10
SHEET 11 OF 13

© 2022 R.W. Building Consultants Inc.

Z:\2023 FBC Drawings\Steves & Sons\FL-41467 R4\FL-41467.10.dwg

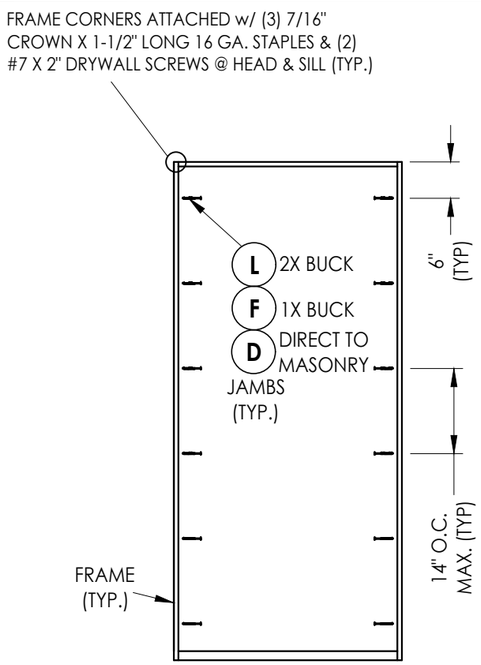

X

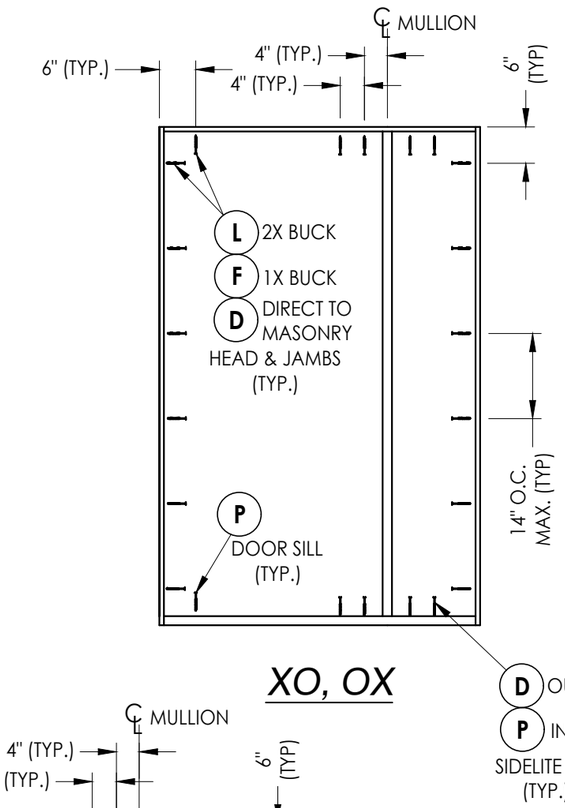

XO, OX

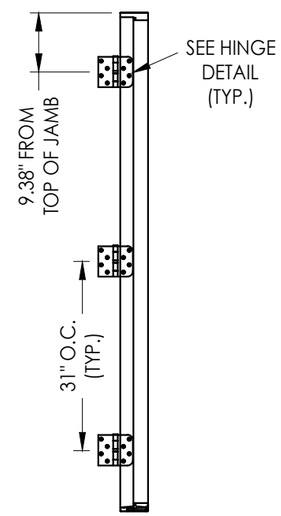

HINGE JAMB/MULLION

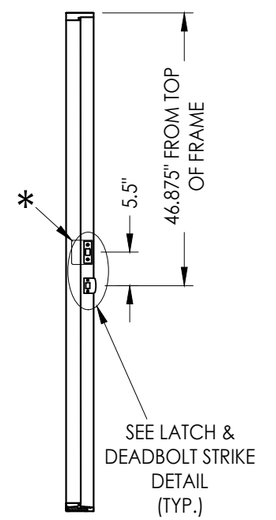

STRIKE JAMB/MULLION
LATCH & DEADBOLT

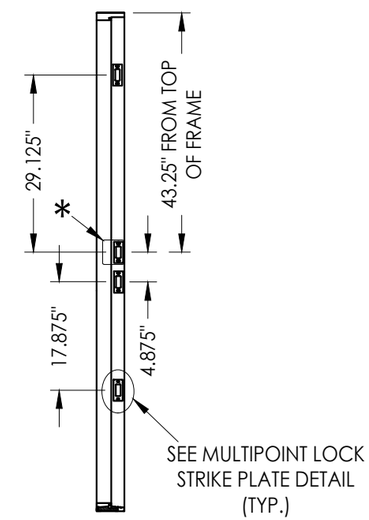

STRIKE JAMB/MULLION
MULTIPOINT LOCK

* 3.5" X 4" 20 GA. STEEL PLATE ATTACHED TO BACK OF LOCK JAMB w/ (4) 1" CROWN X 5/8" LONG 16 GA. STAPLES

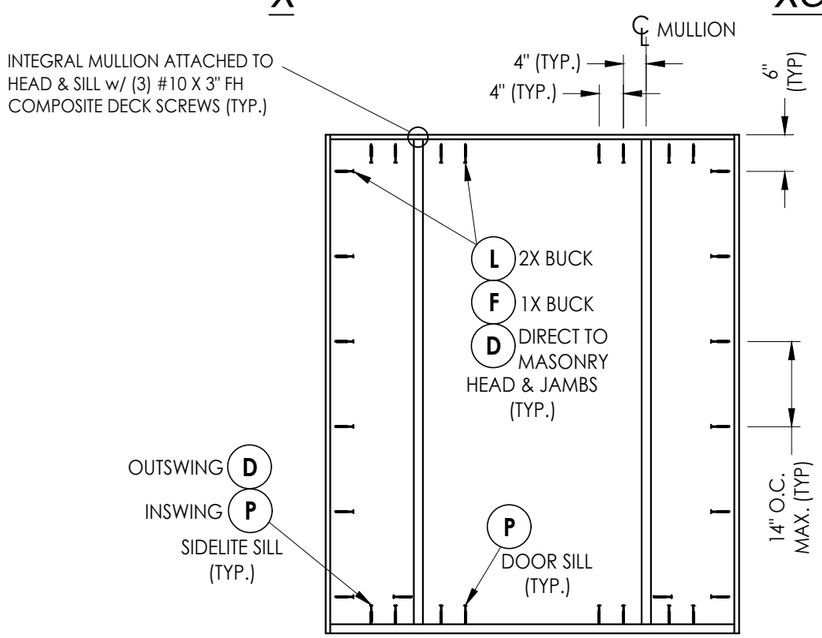

OXO

FRAME ANCHORING

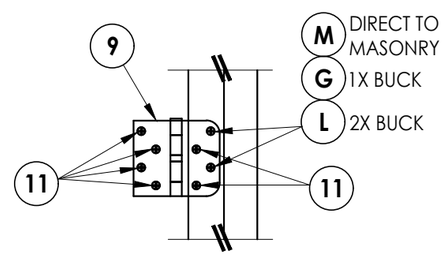

HINGE DETAIL
INSWING

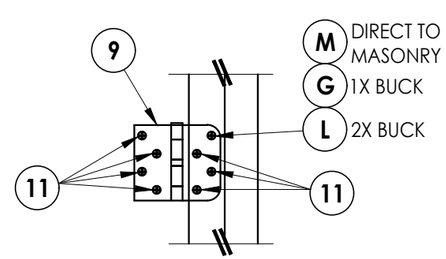

HINGE DETAIL
OUTSWING

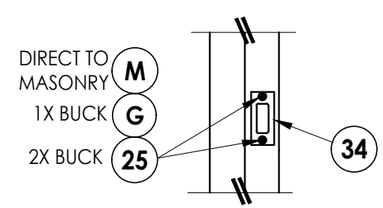

ROCKWELL MULTIPOINT LOCK HARDWARE

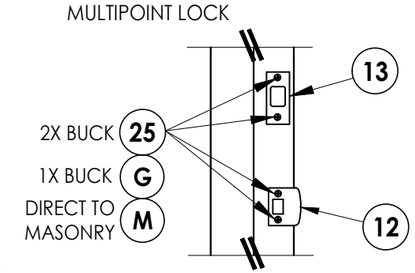

ROCKWELL HARDWARE

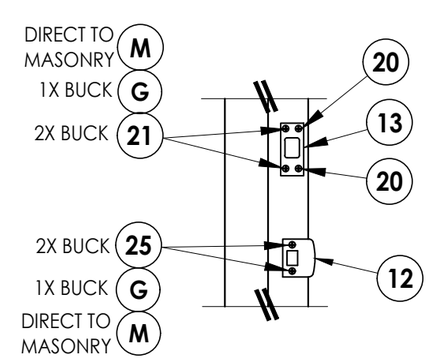

KWIKSET HARDWARE

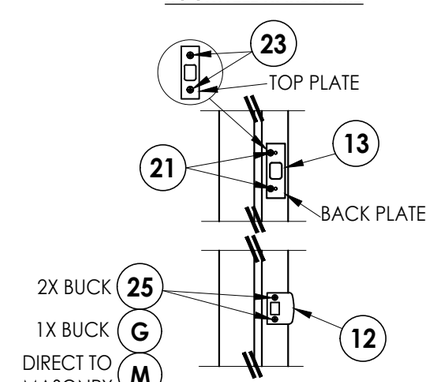

SCHLAGE HARDWARE

HARDWARE DETAILS

Documents Prepared By:
Lyndon F. Schmidt
P.E. No. 43409
RW BUILDING CONSULTANTS, INC.
P.O. Box 230, Valrico, FL 33595
Phone No.: 813.659.9197
FBPE Registry No. 9813

PRODUCT: STEVES & SONS FIBERGLASS DOOR

PART OR ASSEMBLY: FRAME ANCHORING & HARDWARE DETAILS

NO.	DATE	REVISIONS	BY
2	7/02/26	UPDATE TO 9TH ED. (2026) FBC	LFS
1	8/02/23	UPDATE TO 8TH ED. (2023) FBC	LFS

DATE: 3/10/22
SCALE: N.T.S.
DWG. BY: RW
CHK. BY: LFS
DRAWING NO.: FL-41467.10
SHEET 12 OF 13

© 2022 R.W. BUILDING CONSULTANTS INC.

Z:\2023 FBC Drawings\Steves & Sons\FL-41467 R4\FL-41467.10.dwg

BILL OF MATERIALS

ITEM #	DESCRIPTION	MATERIAL
A	1X BUCK (G >= 0.42)	WOOD
B	2X BUCK (G >= 0.42)	WOOD
C	1/4" MAX. SHIM SPACE	-
D	1/4" X 2-3/4" PFH DeWALT OR ITW CONCRETE SCREW	STEEL
E	MASONRY - 3,000 PSI MIN. CONCRETE CONFORMING TO ACI 301 OR HOLLOW BLOCK CONFORMING TO ASTM C90	CONCRETE
F	1/4" X 3-3/4" PFH DeWALT OR ITW CONCRETE SCREW	STEEL
G	3/16" X 3-1/4" PFH ITW CONCRETE SCREW	STEEL
L	#10 X 2-1/2" PFH WOOD SCREW (1.15" MIN. EMB.)	STEEL
M	3/16" X 2-1/4" PFH ITW CONCRETE SCREW	STEEL
P	1/4" X 2-1/4" PFH DeWALT OR ITW CONCRETE SCREW	STEEL
1	COMPOSITE JAMB	COMP
3	COMPOSITE MULLION	COMP/LVL
7	WEATHERSTRIP	FOAM
8	SWEEP	VINYL
9	4" X 4" HINGE	STEEL
11	#9 X 3/4" PFH WOOD SCREW	STEEL
12	LATCH STRIKE PLATE	STEEL
13	DEADBOLT STRIKE PLATE	STEEL
14	INSWING THRESHOLD	ALUM/COMP
15	OUTSWING THRESHOLD	ALUM/COMP
17	INSWING SIDELITE ADAPTER	PVC
18	#8 X 3" SD TRIM SCREW	STEEL
20	#9 X 1/2" PFH WOOD SCREW	STEEL
21	#12 X 2-1/2" PFH WOOD SCREW	STEEL
23	#8 X 3/4" PFH WOOD SCREW	STEEL
25	#8 X 2-1/2" PFH WOOD SCREW	STEEL
27	#7 X 1-5/8" DRYWALL SCREW	STEEL
34	MULTIPOINT LOCK STRIKE PLATE	STEEL
40	DOOR PANEL	-
50	SIDELITE PANEL	-

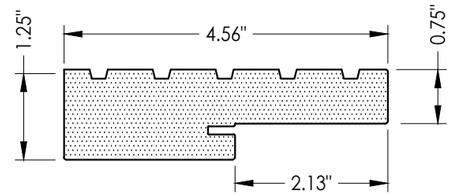

1 **COMPOSITE JAMB**
WORLDWIDE "4EVER"

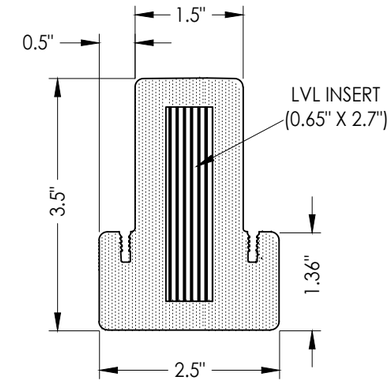

3 **COMPOSITE MULLION**

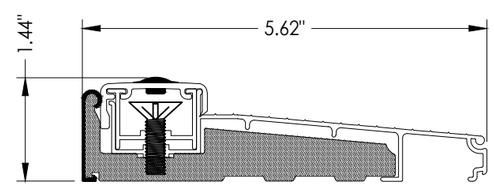

14 **INSWING THRESHOLD**
Columbia

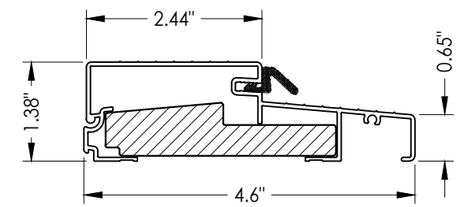

15 **OUTSWING THRESHOLD**
Columbia

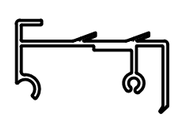

17 **INSWING SIDELITE SPACER**
Columbia

CONCRETE ANCHOR NOTES:

1. *Concrete anchor locations at the corners may be adjusted to maintain the min. edge distance to mortar joints.*
2. *Concrete anchor locations noted as "MAX. ON CENTER" must be adjusted to maintain the min. edge distance to mortar joints, additional concrete anchors may be required to ensure the "MAX. ON CENTER" dimension are not exceeded.*
3. *Concrete anchor table:*

ANCHOR TYPE	ANCHOR SIZE	MIN. EMBEDMENT	MIN. CLEARANCE TO MASONRY EDGE	MIN. CLEARANCE TO ADJACENT ANCHOR
ITW BUILDEX TAPCON®	3/16"	1-1/4"	3"	1-1/2"
	1/4"	1-1/4"	2"	4"
DeWALT ULTRACON®+	1/4"	1-1/4"	1"	4"

WOOD SCREW INSTALLATION NOTES:

1. *Maintain a minimum 5/8" edge distance, 1" end distance, & 1" o.c. spacing of wood screws to prevent the splitting of wood.*

Documents Prepared By:
Lyndon F. Schmidt
P.E. No. 43409
RW BUILDING CONSULTANTS, INC.
P.O. Box 230, Valrico, FL 33595
Phone No.: 813.659.9197
FBPE Registry No. 9813

PRODUCT: ALL SEASONS, INC. FIBERGLASS DOOR

PART OR ASSEMBLY: BILL OF MATERIALS & COMPONENTS

REVISIONS

NO.	DATE	BY
2	7/02/26	UPDATE TO 9TH ED. (2026) FBC	LFS
1	8/02/23	UPDATE TO 8TH ED. (2023) FBC	LFS

DATE: 3/10/22
SCALE: N.T.S.
DWG. BY: RW
CHK. BY: LFS
DRAWING NO.: FL-41467.10
SHEET 13 OF 13

© 2022 R.W. Building Consultants Inc.

Z:\2023 FBC Drawings\Steves & Sons\FL-41467 R4\FL-41467.10.dwg